LED Shoe Box Light

Power and CCT Adjustable

WET LOCATION RATED | DIMMING | WARRANTY 5 YEARS PERIOD | IP66 | FIELD ADJ. | DALI 2 | DMX512 | W | CCT | 3000K | 4000K | 5000K

Switchable Wattage and CCT

180lm/W LED Shoe Box

Cost-Effective , superior performance

Elegant appearance

60 / 80 / 100 / 120W

150 / 200W

250 / 300W

Intertek | DLC LISTED PREMIUM | FC | CE | CB | SAA | RoHS

Shenzhen Sungreat Energy Technology Co. Ltd.

Add: B21, Dongfang Yayuan, Baomin 2nd Road, Chentian Community, Xixiang Street, Bao'an District, Shenzhen, China

Contact Us

www.sungreatenergy.com

WA：86-15776467829

E-mail: info@sungreatenergy.com

Photocell (Option)

Optional photocell allows for security and energy saving

Optics

Zero uplight distributions. Independently designed optical lens, using anti-UV material to maximize the
lighting effect while reducing glare.

Motion Sensor(Option)

PIR Sensor and plug in and play

Microwave Sensor optional.

Power and CCT controller

The wattage and CCT can be changed by switch selection on the controller, it easy and very fast to meet the varied requirements.

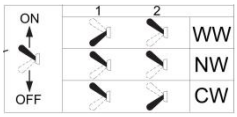

GENERGY

Features:

- ◆Light Efficiency: 180lm/W-220lm/W
- ◆Heavy duty die cast aluminum housing with ample heat sinking;
- ◆High bright SMD 2835/3030,LM80 listed
- ◆Optics of Type II / III / IV / V available on request
- ◆Low-profile design delivers high-performance illumination and improves application site aesthetics
- ◆Lntegrated NEMA/ANSI C136.10 3-pin twist-lock receptacle with shorting cap, standard on all fixtures, simplifies ordering requirements for photo control needs
- ◆IP66/IK08/4KV rating for outdoor usage
- ◆Four contractor-friendly mounting options available (sold separately): slip fitter mount, adjustable pole mount for square and round poles, fixed pole mount for square and round poles, and trunnion mount
- ◆0-10Vor 1-10V dimming for low power consumption
- ◆ETL/cETL/SAA/DLC/C-TICK/FCC/CE/RoHS approval
- ◆5 years warranty

Specifications:

Model	SBL60	SBL80	SBL100	SBL120	SBL150	SBL200	SBL250	SBL300
Wattage	60W	80W	100W	120W	150W	200W	250W	300W
Input Voltage	100-277V/277-480V/100-347V,50 / 60 Hz							
Luminous Flux	9600lm-10800lm	12000lm-14400lm	14000lm-18000lm	15600lm-21600lm	22500lm-27000lm	28000lm-36000lm	37500lm-45000lm	42000lm-54000lm
Color Temperature	3000K/ 4000K/ 5000K/5700K/ 6500K							
Beam Angle	Type II / III / IV / V							
CRI	Ra70 (Ra80 or Ra90 optional)							
PF	≥0.95							
Operation Temperature	-40°C to + 65°C							
Net Weigh(kg/lbs)	3.9 / 8.6				4.9 / 10.8	5.3 / 11.7	7.4 / 16.3	
GrossWeight (kg/lbs)	4.6 / 10.1				5.8 / 12.8	6.3 / 13.9	8.5 / 18.7	
Size Of Box(mm/in)	560*365*140 / 22*14.4*5.5				695*365*140 / 27.4*14.4*5.5		870*380*150 / 34.3*15*5.9	

Dimension:

Unit: mm/in

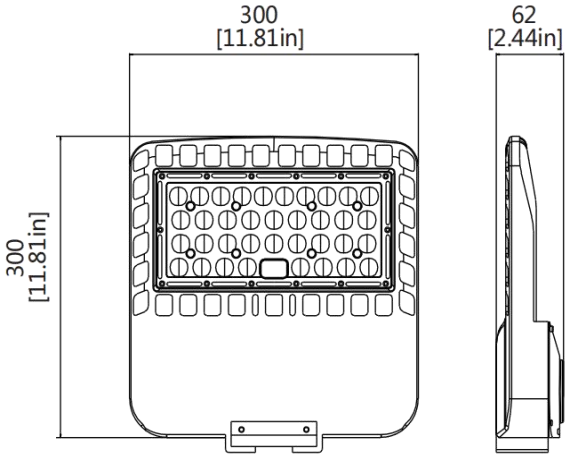

SBL60/80/100/120

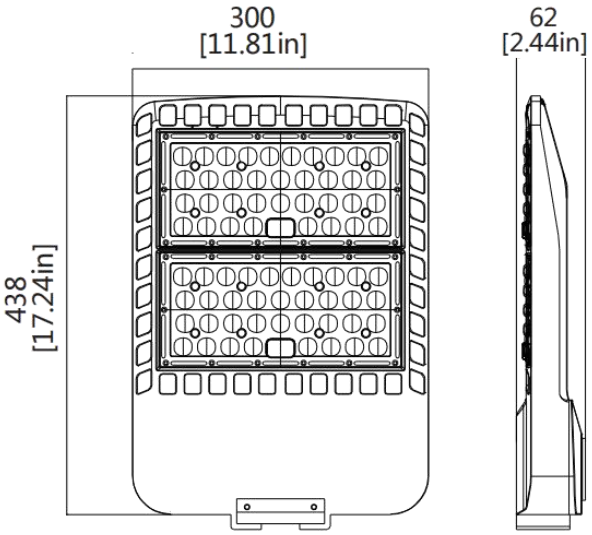

SBL150/200

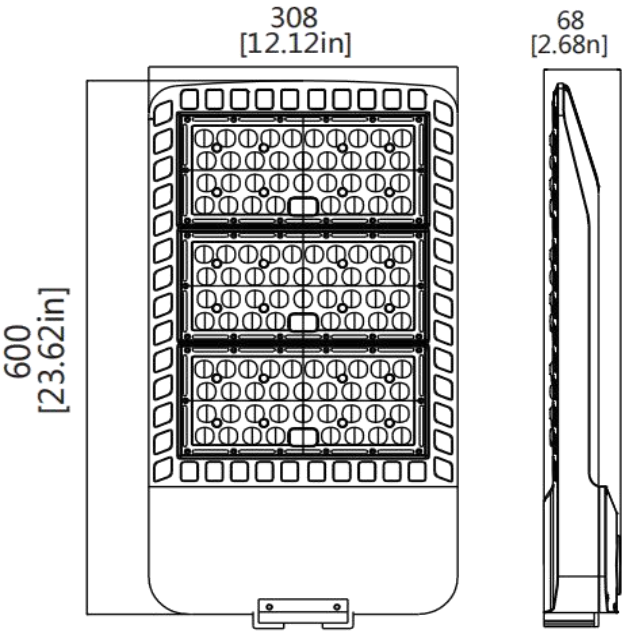

SBL250/300

Light Distribution Patter:

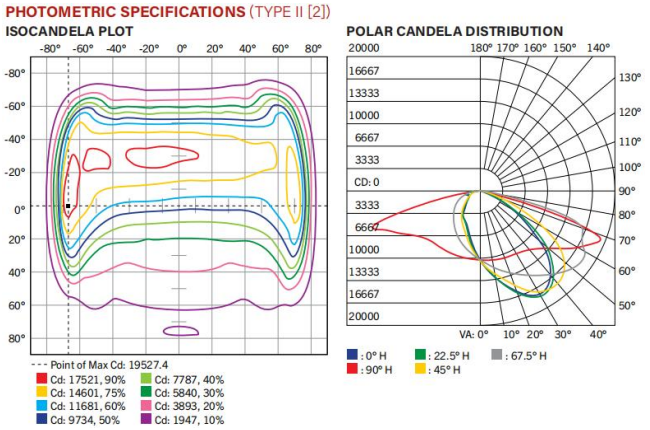

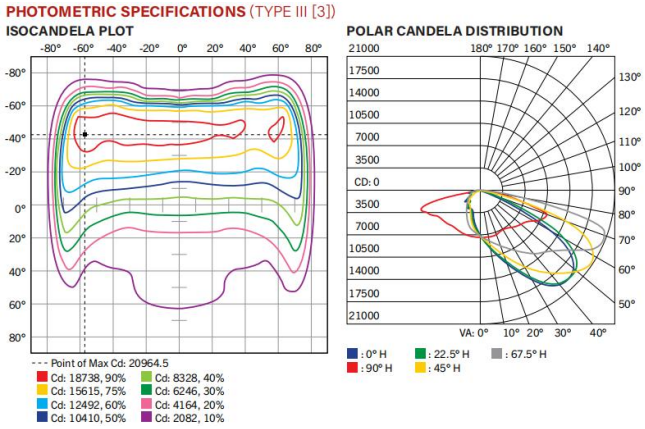

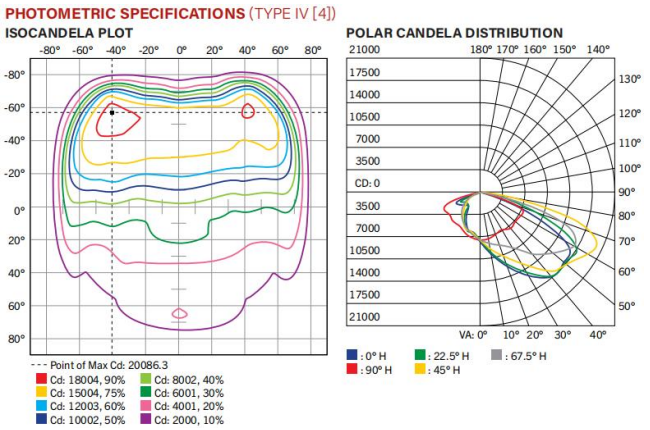

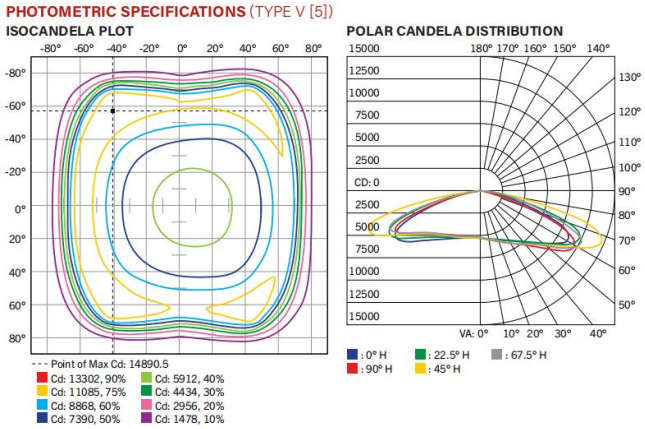

Details:

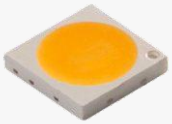

- High bright SMD 2835/3030,Lm80 listed.

- LED driver, 1-10V or 0-10v dimming , high reliable, offer 7 years warranty.

- The switch selector allows customers to simply select different wattages and cct.

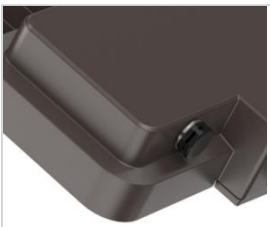

- Vent design
  Avoid fogging and frosting.

Application:

LED Streetlights for urban roads, residential areas, industrial areas, sidewalks, squares, parks, schools, villas, gardens and other places lighting.

Installation:

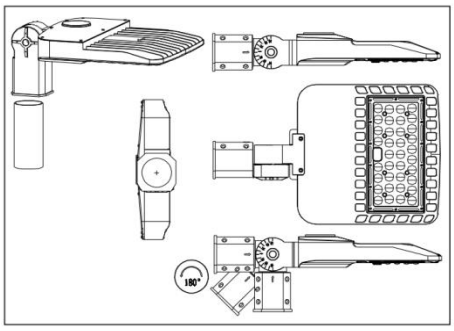

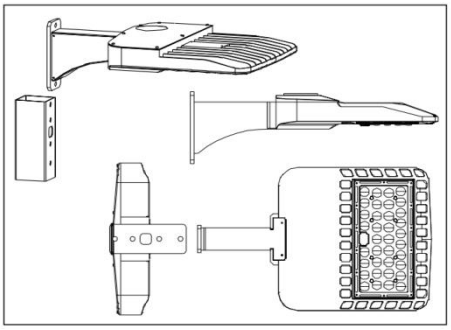

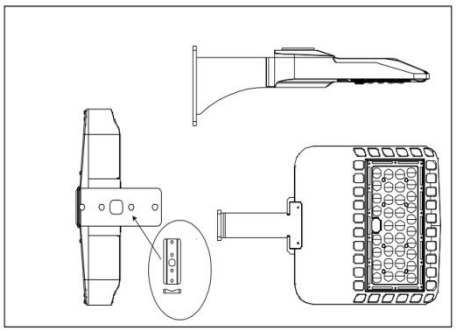

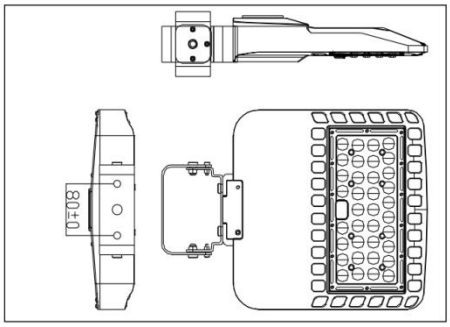

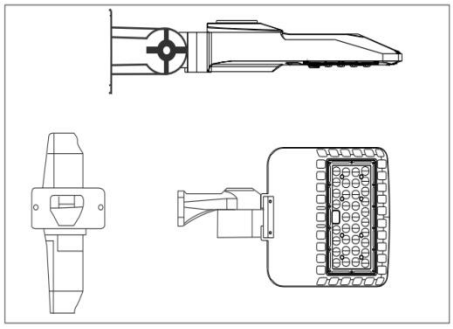

WIRING:

RISK OF FIRE: Universal voltage driver permits operation at 100V through 277V,277V through 480V,100V through 347V,50 or 60 Hz. For 1-10V or 0-10V dimming follow wiring directions as shown in Fig. 1. For non-dimming,follow the wiring directions as shown in Fig.2.

Fig.1

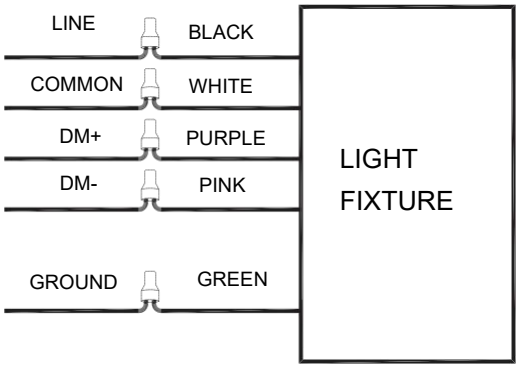

Fig.2

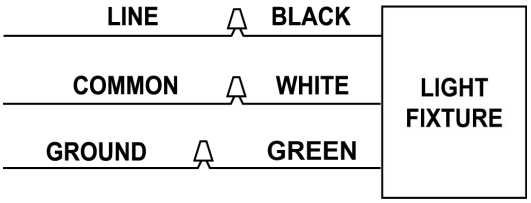

FIELD-ADJUSTABLE CCT & WATTAGE:

Follow instructions below to change the Fixture Power (W)and/or Color Temperature (CCT) from factory settings:

1. Locate the Field Adjustable Switches on Fixture Housing as shown below.
2. Select Power (W) and/or Color Temperature (CCT) by sliding respective switch to the desired value (Fig.3).

Fig.3

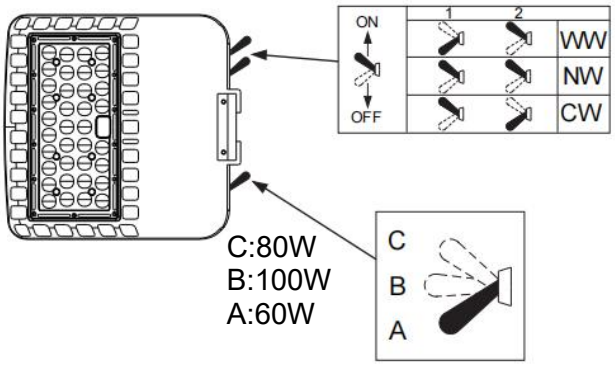
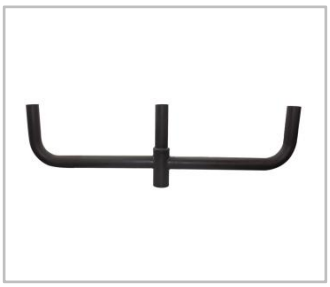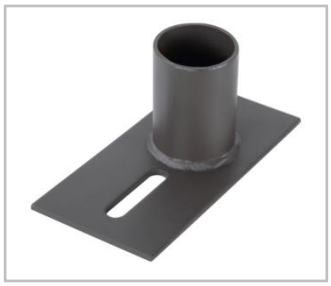
Optional Accessories: