NEW DESIGN

FX Series
Integrated Solar Street Light
With Adjustable Bracket

High Cost Performance

High Quality

High Brightness

5-7 Cloudy/ Rainy Days

Human Body Induction

Remote Control

Adjustable Bracket

IP66 Waterproof

INTRODUCTION

Product specifications

1 Front Cover

2 Catalog

3 Advantages

4 Specifications

5 Exploded View

6 Light Distribution Curve

7 More Details

8 Controller Instruction

9 Remote Control Instruction

10 Dimension Figure

11 Adjustable Bracket Instruction

12 Package Detail

13 Installation Instruction

14 Applications

FX Series | Advantages

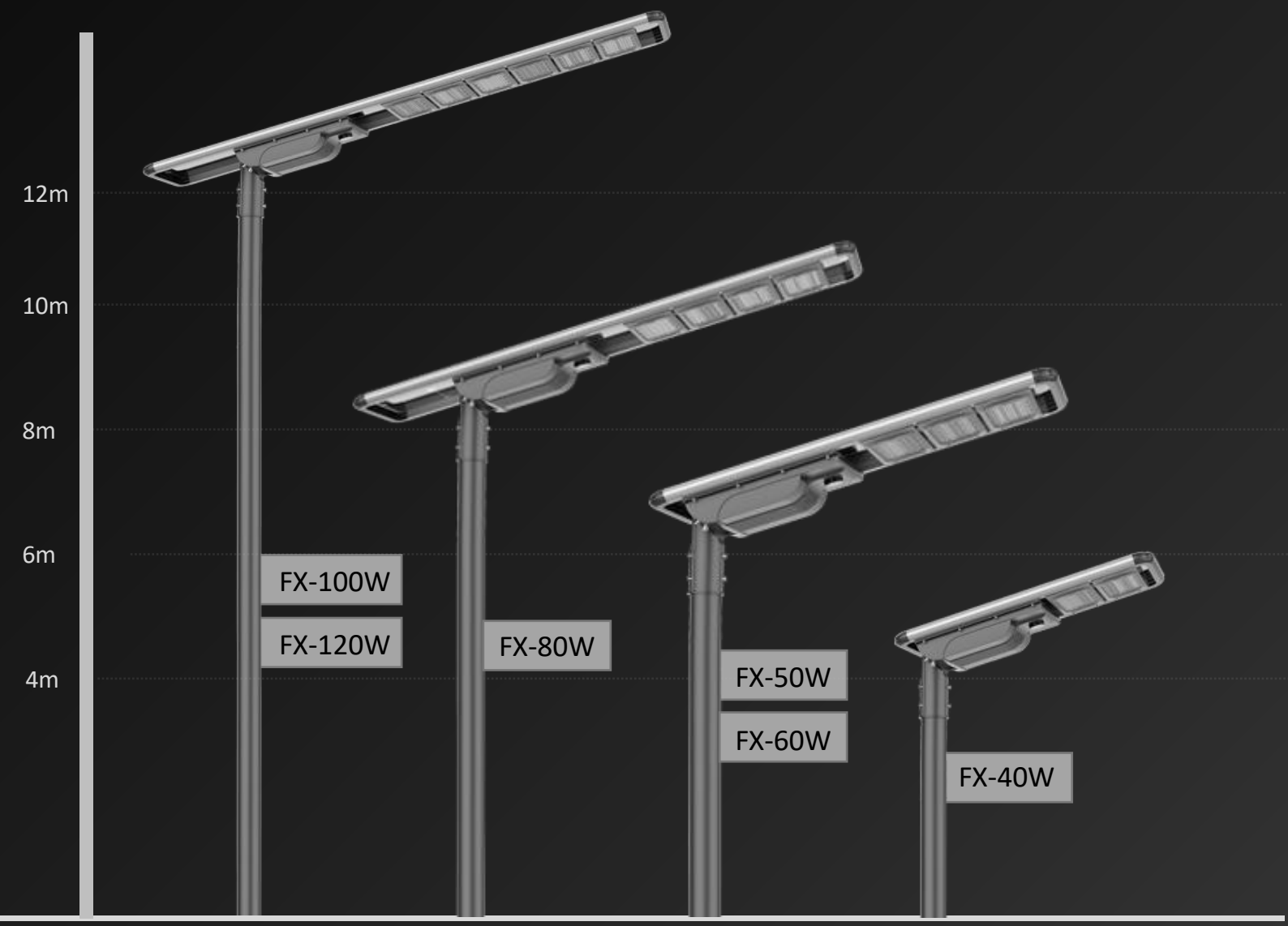

Product Advantages:

1. Designed by a professional industrial design team, integrating solar panels, led sources, controller, battery, human body induction, and housing.
2. Adjustable angle mounting bracket, suitable for a variety of modeling lamp pole installation methods.
3. Intelligent power adjustment, automatic weather judgment, reasonable planning of discharge rules.
4. Intelligent charging and discharging management, soft and hard double protection of charging and discharging and intelligent equalization technology, battery cycles more than 2000 times.
5. Smart remote control, equipped with drone remote control, ultra-long remote control distance of 30 meters, can pass through obstacles, and can set four lighting modes at will.
6. High-efficiency LED chips can reach 220LM/W, which is more than twice the average brightness of ordinary LED light sources, with a luminous angle of 140 degrees, and a wider irradiation area.
7. The whole lamp adopts modular minimalist design, easy disassembly, installation, and transportation.

FX Series | Specifications

Led Source	FX-40W	FX-50W	FX-60W	FX-80W	FX-100W	FX-120W
Mono Solar Panel	18V 60W	18V 70W	18V 80W	18V 100W	18V 130W	18V 140W
LifePO4 Battery	12.8V 15AH	12.8V 30AH	12.8V 30AH	12.8V 45AH	12.8V 45AH	12.8V 60AH
LED（Bridgelux）	3030/96PCS	3030/144PCS	3030/144PCS	3030/192PCS	3030/288PCS	3030/288PCS
Color Temperature	2700K-6500K，RA>70					
Brightness	220LM/W					
Working Time	12-15hours, 10-12 cloudy/ rainy days					
Charging Time	6-8hours					
Mounting Caliber	70-76mm（suggestion）					
Working Temperature	-25℃ - +65℃					
Body Sensor	160°，>9m , Activated by customer’s need					
Battery Power Indicators	100%-75%-50%-25%					
Fault indicator	RED/BLUE/GREEN					
IP Rating/IK Class	IP66/IK09					
Mounting Height	6-7m	6-8m	6-8m	8-9m	9-11m	10-12m
Space between 2 lamps	20-25m	20-25m	20-25m	25-30m	30-35m	35-40m
Warranty	3 years / 5 years					

FX Series | Exploded View

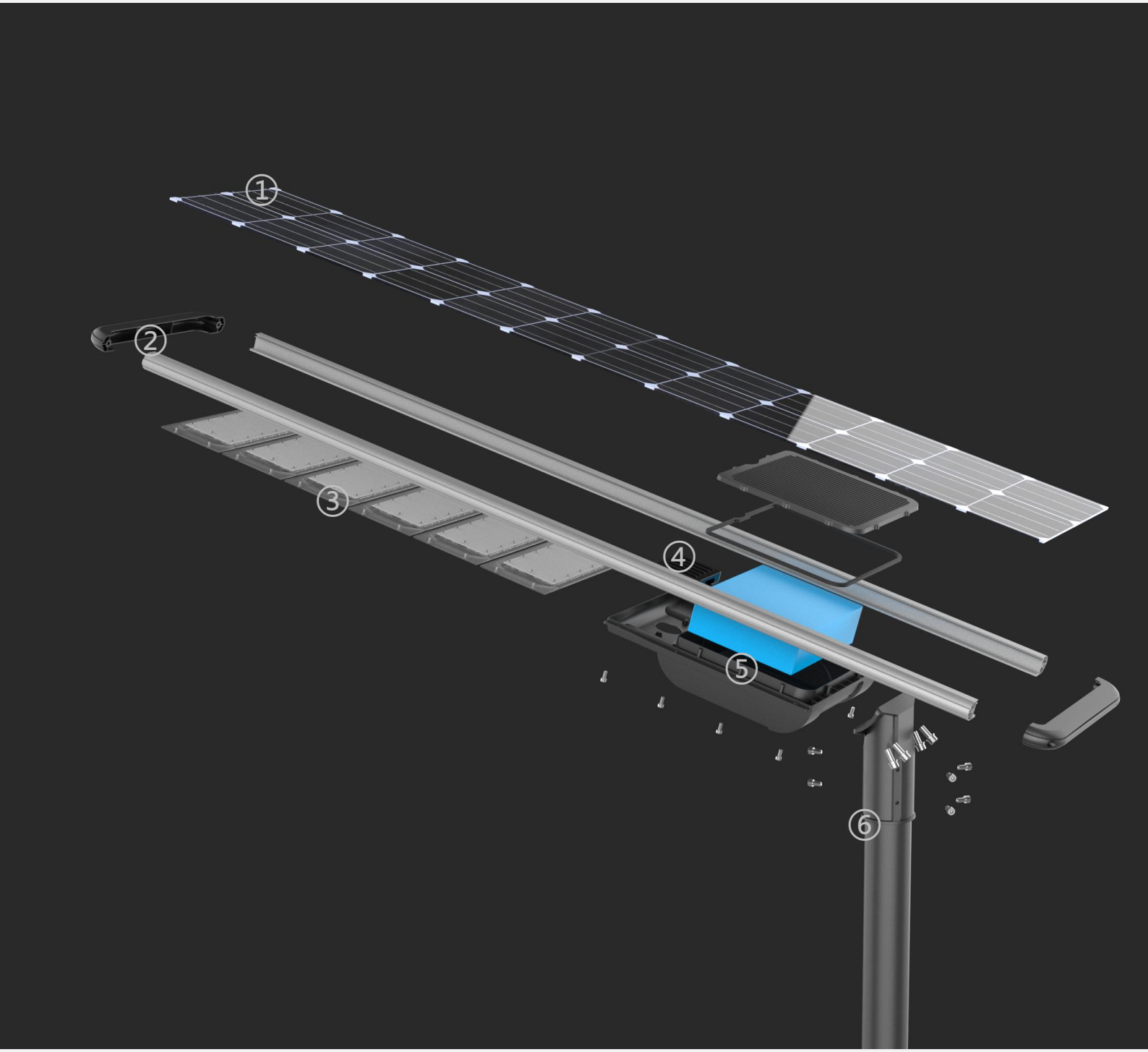

1 Solar panel

2 Lamp shell

3 LED light board + optical lens

4 Controller

5 Battery pack and battery box

6 Adjustable angle bracket

INTENSITY DISTRIBUTION DIAGRAM
IN C PLANS

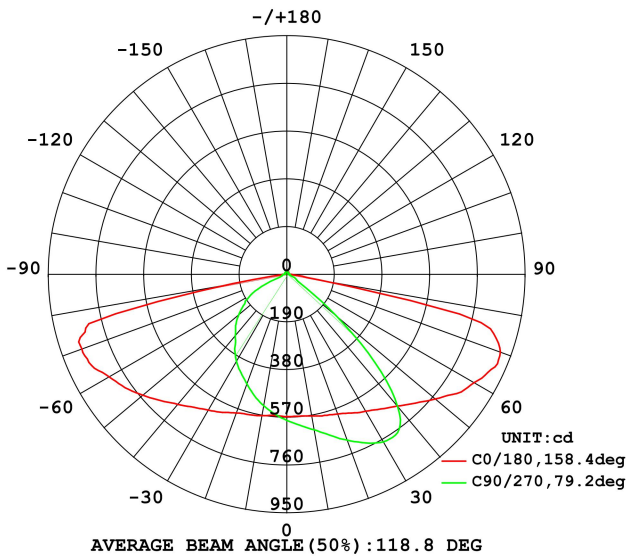

MAX INTENSITY CONE SURFACE
DISTRIBUTION DIAGRAM

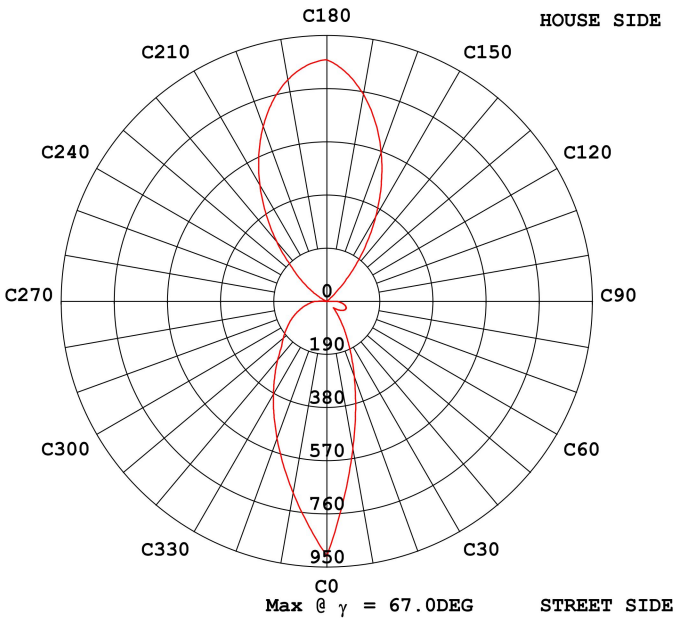

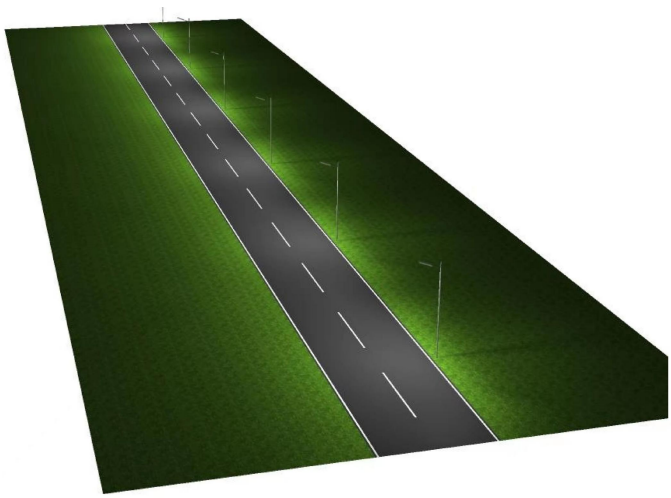

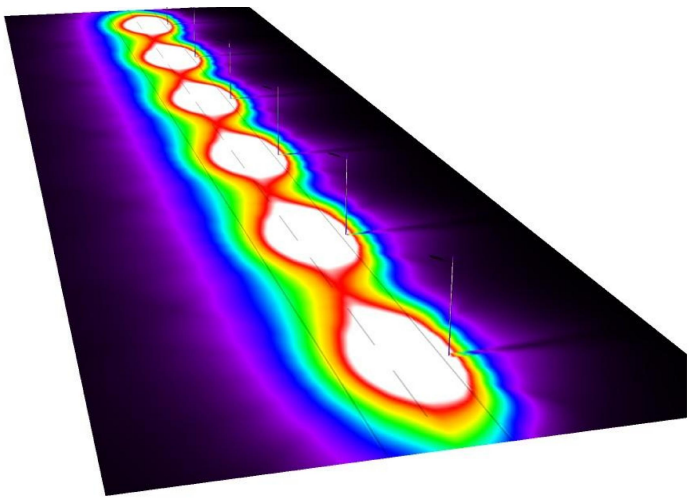

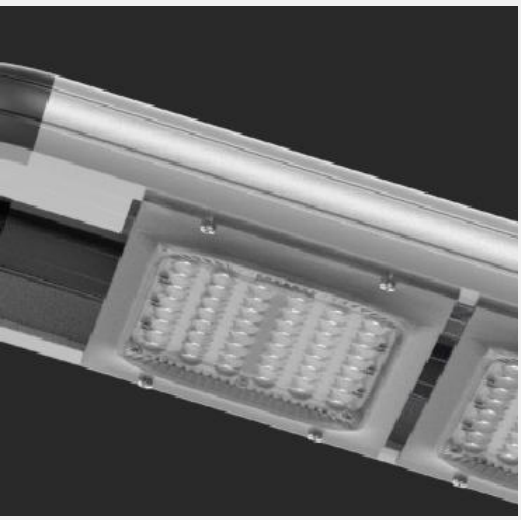

220LM/W
high efficiency led

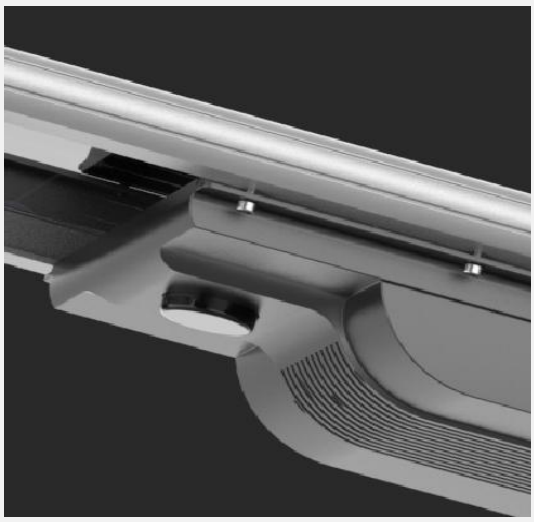

Sensor + Magnet switch
+ Indicators for all status

0° - 90° angle
adjustable bracket

Easy maintenance
battery pack

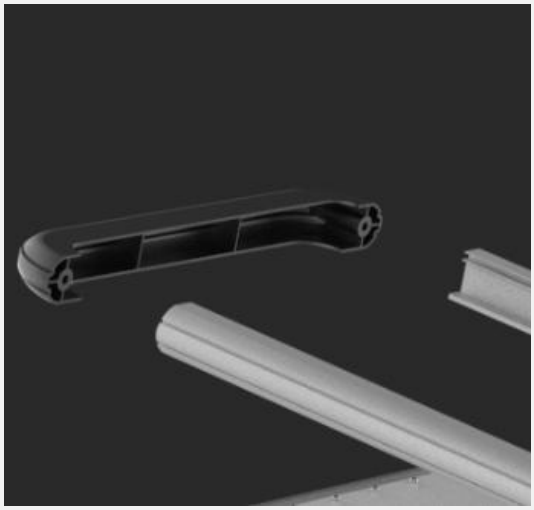

High-strength
aluminum alloy frame

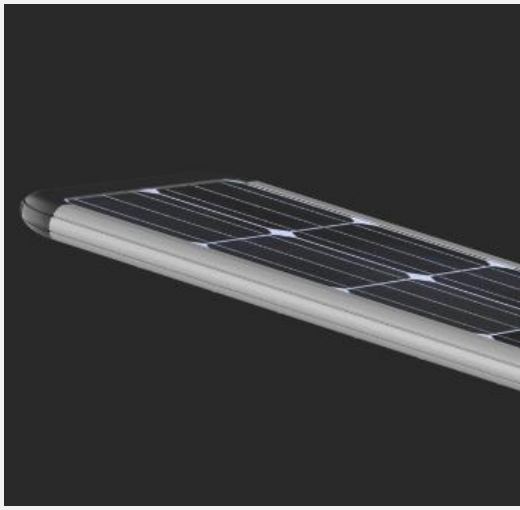

High-efficiency mono
solar cells: >21%

The Controller of FX series adopts extremely simplified design, integrated controller, microwave induction, and magnetic switch in one, which makes the operation simple, the maintenance simple, and the stability is higher.

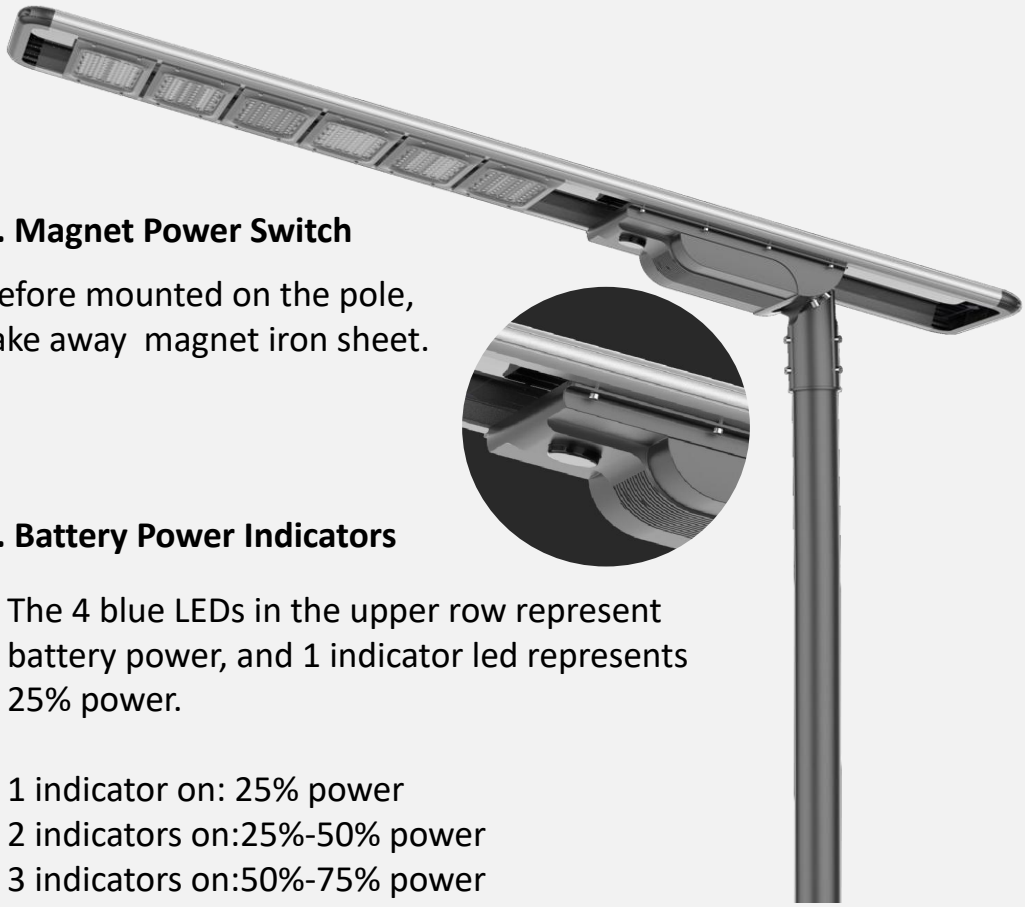

1. Magnet Power Switch

Before mounted on the pole, take away magnet iron sheet.

2. Battery Power Indicators

The 4 blue LEDs in the upper row represent battery power, and 1 indicator led represents 25% power.

1 indicator on: 25% power
2 indicators on:25%-50% power
3 indicators on:50%-75% power
4 indicators on:75%-100% power

3. Status Indicators LEDs

Solar Light Controller Status Indicator		
Indicator Light	Status	Indicator Light description
①Yellow(Motion sonsor)	On	Movement Detected
	Off	Without Movement Detected
②Green(LED)	On	LED with output: Light on
	Off	LED without output: Light off
	Flicker	LED Short circuit
③Blue(Battery)	On	Battery power enough for work
	Off	Battery Withuot output
	Flicker	Battery undervoltage
④Red (Solar panel)	On	Battery charged to full power
	Off	Solar panel without output (at night)
	Flicker	Solar panel is charging the battery
⑤Red&Green&Blue	Cycle light on in sequence	Battery cable plugged in backwards, poor battery connection contact, faulty battery, no battery connected

FX Series | Remote Control

Equipped with a 433 remote control, which uses a drone remote control solution. The remote control distance can reach 30 meters, which can directly penetrate obstacles. At the same time, it can control multiple lamps.

Four lighting modes are available. The mode can be selected according to the seasonal sun . The most suitable mode can be selected according to the seasonal sunshine.

User manual for remote controller:

Demo: No matter day or night, light "on" for 1 minute, only for test use.

Off: No matter day or night, light "OFF" .

L: At night, 12 hrs full power.

T: At night, 4 hrs full power + 8 hrs 25%.

M: At night, 12 hrs motion sensor control.

U: At night, 4 hrs full power + 8 hrs motion sensor control.

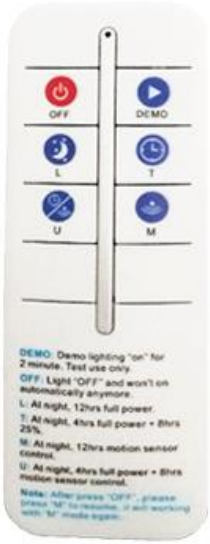

FX Series | Dimension Figure

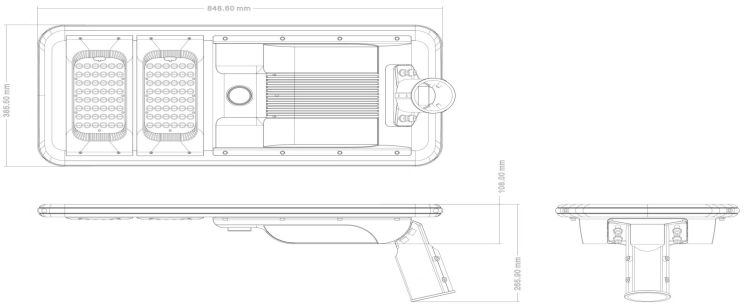

FX-40W

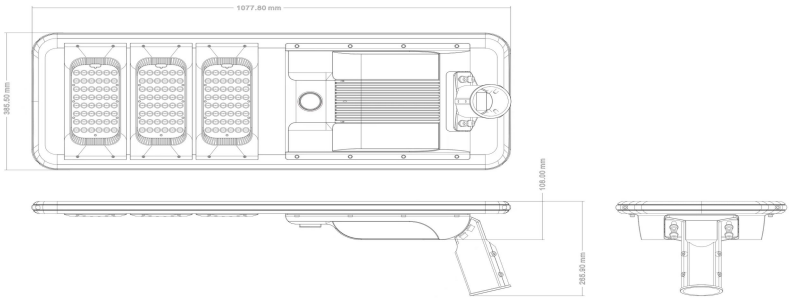

FX-50W/60W

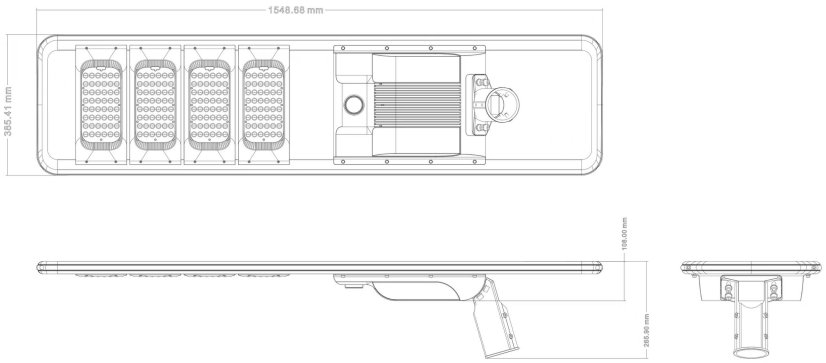

FX-80W

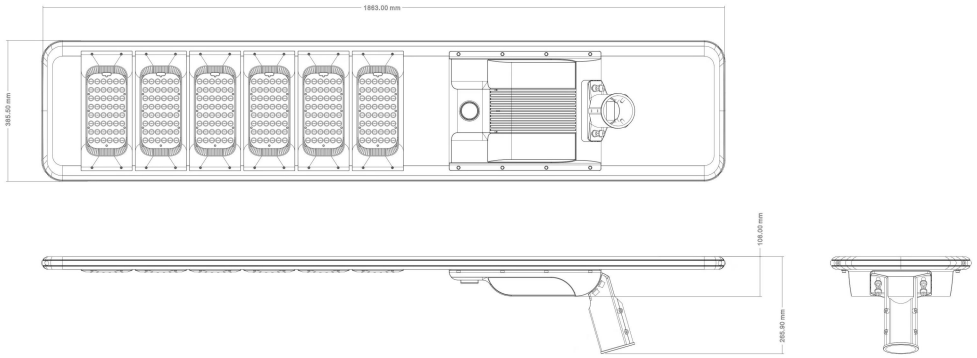

FX-100W/120W

2 Installation Ways for Selections

FX-40W/FX-50W/FX-60W Package

1 package: 1pc lamp per carton

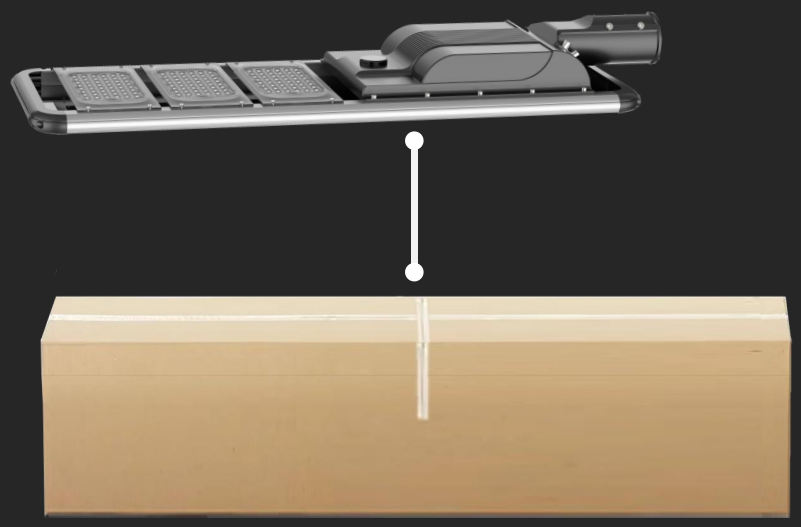

FX-80W/FX-100W/FX-120W Package

2 packages: 1pc lamp per carton + 1pc battery pack per carton

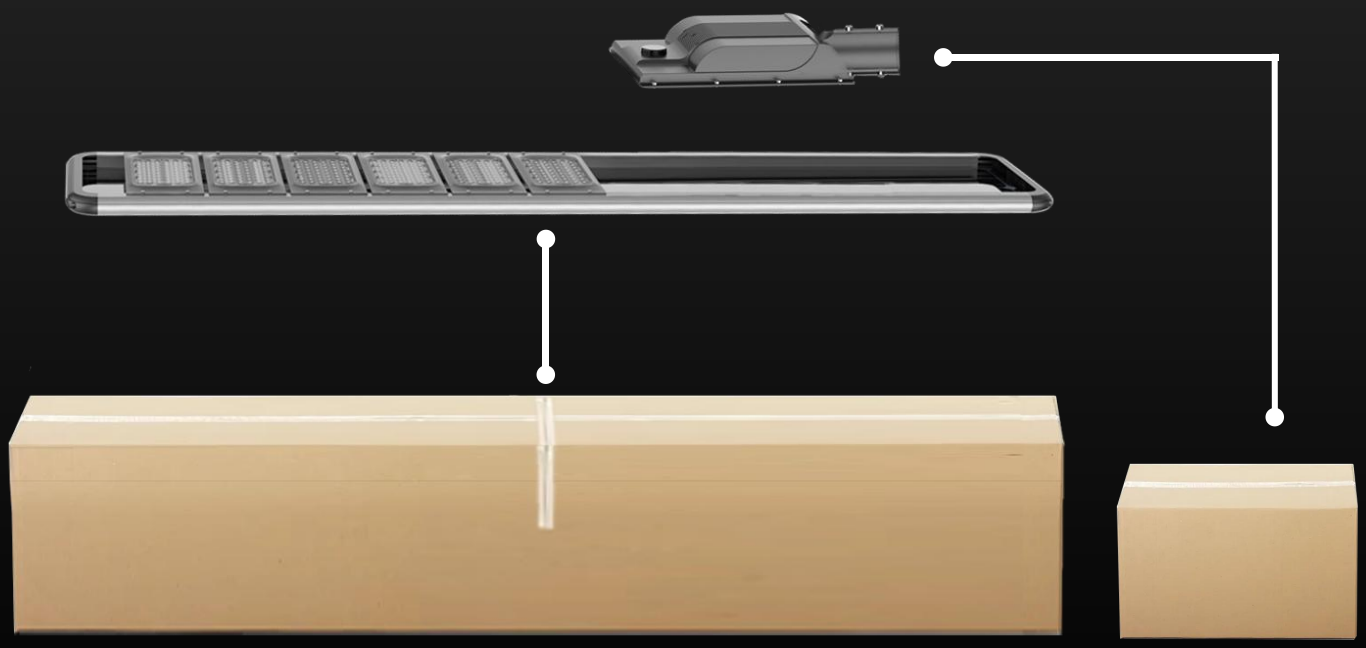

1. Dig a hole according to the size of the foundation cage, put the foundation cage into the hole and fix it with concrete.

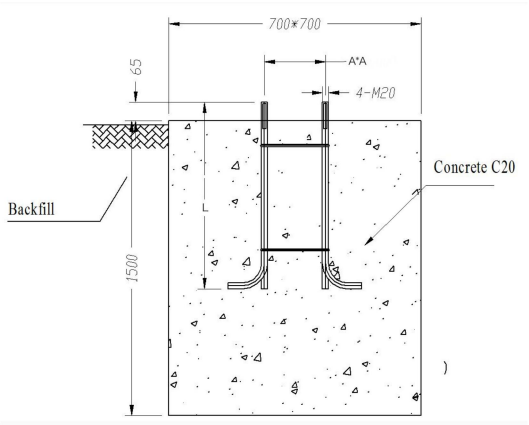

2. Use the supplied screws to fix the bracket on the lamp.

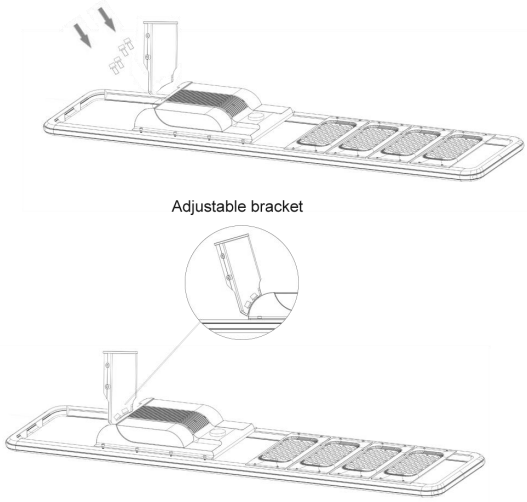

3. Use the supplied screws to fix the lamp on the pole.

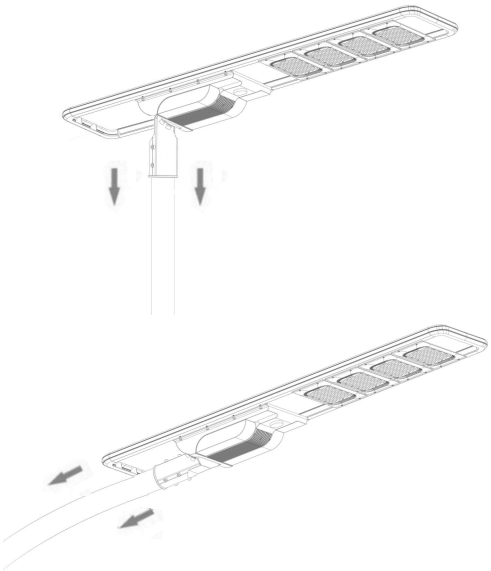

4.Lift the lamp pole by the person or machine, align the bottom flange of the lamp pole with the foundation cage, and then fix the lamp pole with screws.

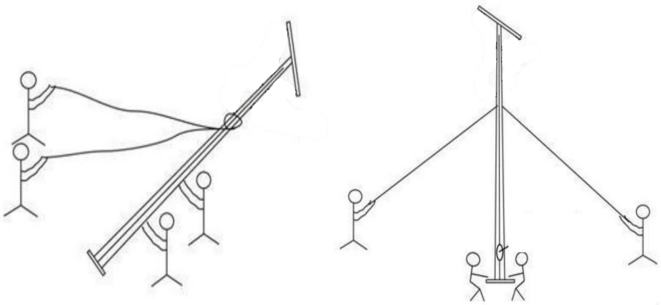

Widely used in branch roads, streets, and factory roads, parks, villages, mountainous and remote areas, lighting projects, courtyards, schools, squares and other places that require outdoor lighting, helping domestic traditional lighting to upgrade to LED green new energy lighting Replace.

Thank You Very Much